2026-11-02

Husqvarna Automower® 435X AWD



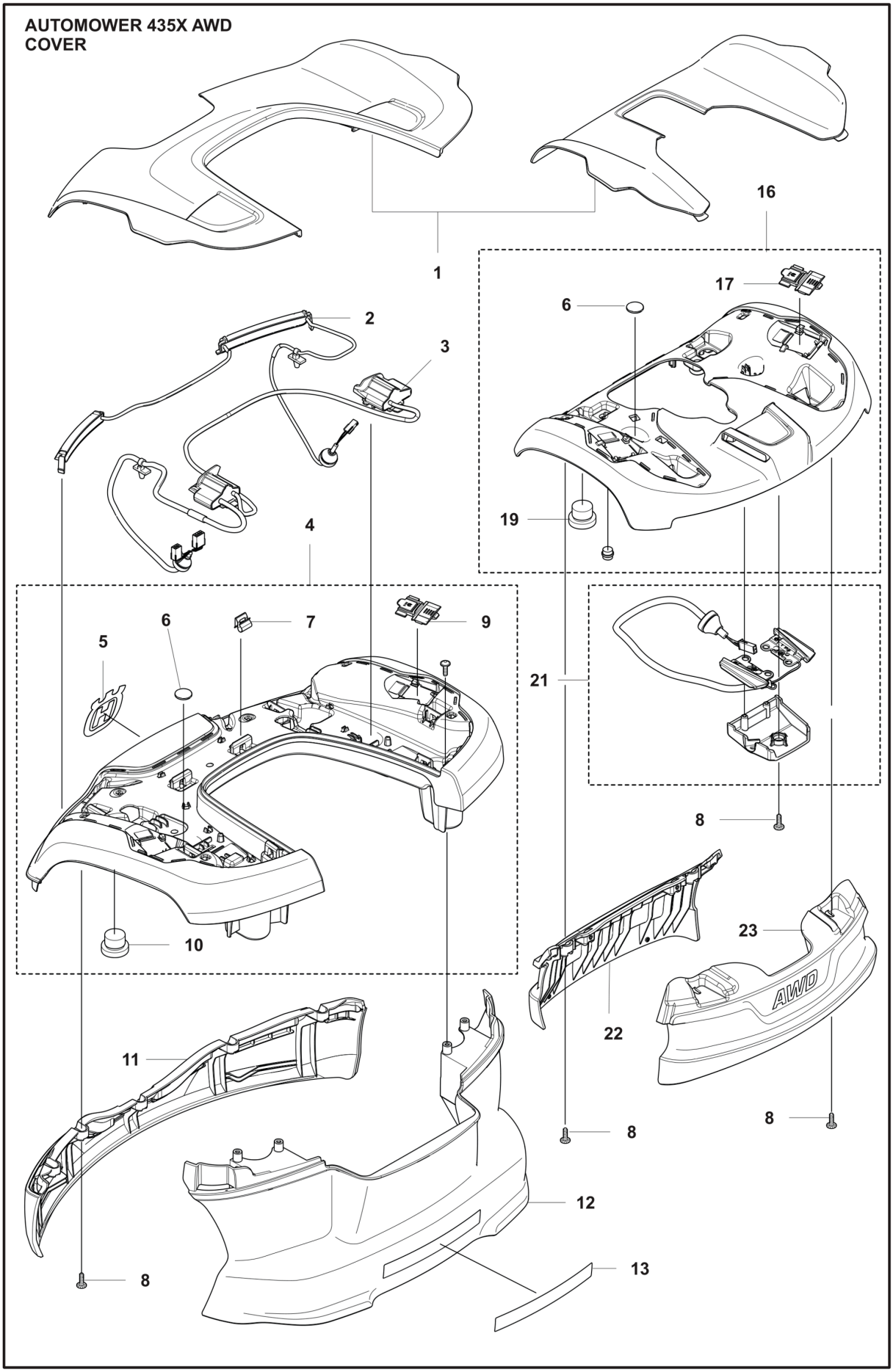
AUTOMOWER 435X AWD
COVER
1
16
17
6
2
3
19
4
5
6
7
9
21
8
10
23
AWD
22
8
8
11
12
13
8

Reference	Artikelnummer	Varenavn	Antal	Kommentar
1	596300001	BODY KIT	1	Top Cover Grey
1	596300002	BODY KIT	1	Top Cover White
1	596300003	BODY KIT	1	Top Cover Orange
2	597501401	LEDNING KPL	1	LED light wiring
3	588596704	LEDNING KPL	1	US Sensor
4	597161801	BODY ASSY	1	Front
5	587423502	MÆRKAT	1	Husqvarna Crown
6	593822101	MAGNET	2	Magnet
7	593778401	KLEMME	1	Body connection
8	574450101	SKRUE ITXPANT	10	
9	591494601	HOLDER	1	Wheel Brusch
10	580526801	HAT	1	Snaploc
11	591467401	KOFANGER	1	Front
12	591467501	KOFANGER	1	Front tail
13	586359701	MÆRKAT	1	Warning
16	597161901	BODY ASSY	1	Rear

17	591494601	HOLDER	1	Wheel Brusch
19	580526801	HAT	1	Snaploc
21	597165602	CHARGING PLATE KIT	1	Kit containing Charging plate wiring + Battery charging adapter.
22	591467801	KOFANGER	1	Rear Head
23	591467901	KOFANGER	1	Rear Tail

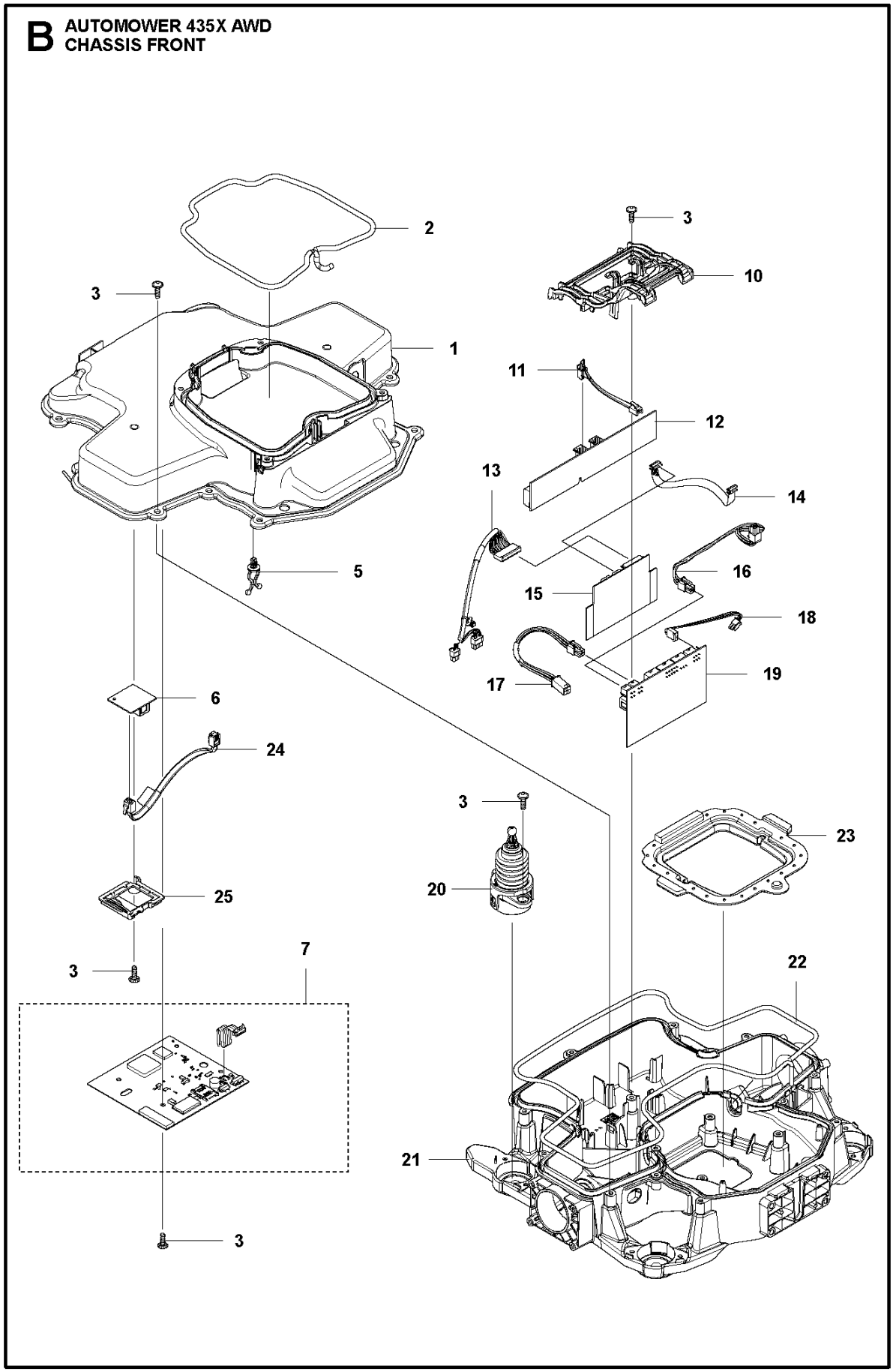
B AUTOMOWER 435X AWD
CHASSIS FRONT
2
3
1
5
3
10
11
12
13
14
16
15
18
17
19
6
24
3
23
20
25
7
3
22
21
3

Reference	Artikelnummer	Varenavn	Antal	Kommentar
1	592743401	CHASSIS	1	Upper front
2	574874714	TÆTNINGSLISTE	1	Chassis Upper Front
3	575543314	SCREW	4	
5	580682901	TOOL HOLDER	11	Twist lock
6	591125501	KREDSKORT	2	Magnetic Sensor
7	586662314	GPS MODULE	1	AM Connect, Kit, US,CA
7	586662315	GPS MODULE	1	AM Connect Kit
10	592743701	HOLDER	1	PCB front
11	536253908	LEDNING KPL	1	Modular Jack
12	546007101	KREDSKORT	1	Loop Receiver Board
13	580614402	LEDNING KPL	1	Ultra Sonic Extension
14	579708602	LEDNING KPL	1	AUX
15	578285703	KREDSKORT	1	Ultra Sonic Board
16	591203103	LEDNING KPL	1	HMI cable 4P
17	591203301	LEDNING KPL	1	Main Cable Adapter 4P
18	588818403	LEDNING KPL	1	Led Light Extension

19	591125602	KREDSKORT	1	Motor Controler Board
20	592736301	JOYSTICK	4	Assy
21	592743601	CHASSIS	1	Lower front
22	574874712	TÆTNINGSLISTE	1	Chassis Lower Front
23	598369701	STØVTÆTNING	1	
24	536253908	LEDNING KPL	1	Modular Jack
25	591494301	HOLDER	1	Magnetic Sensor Board

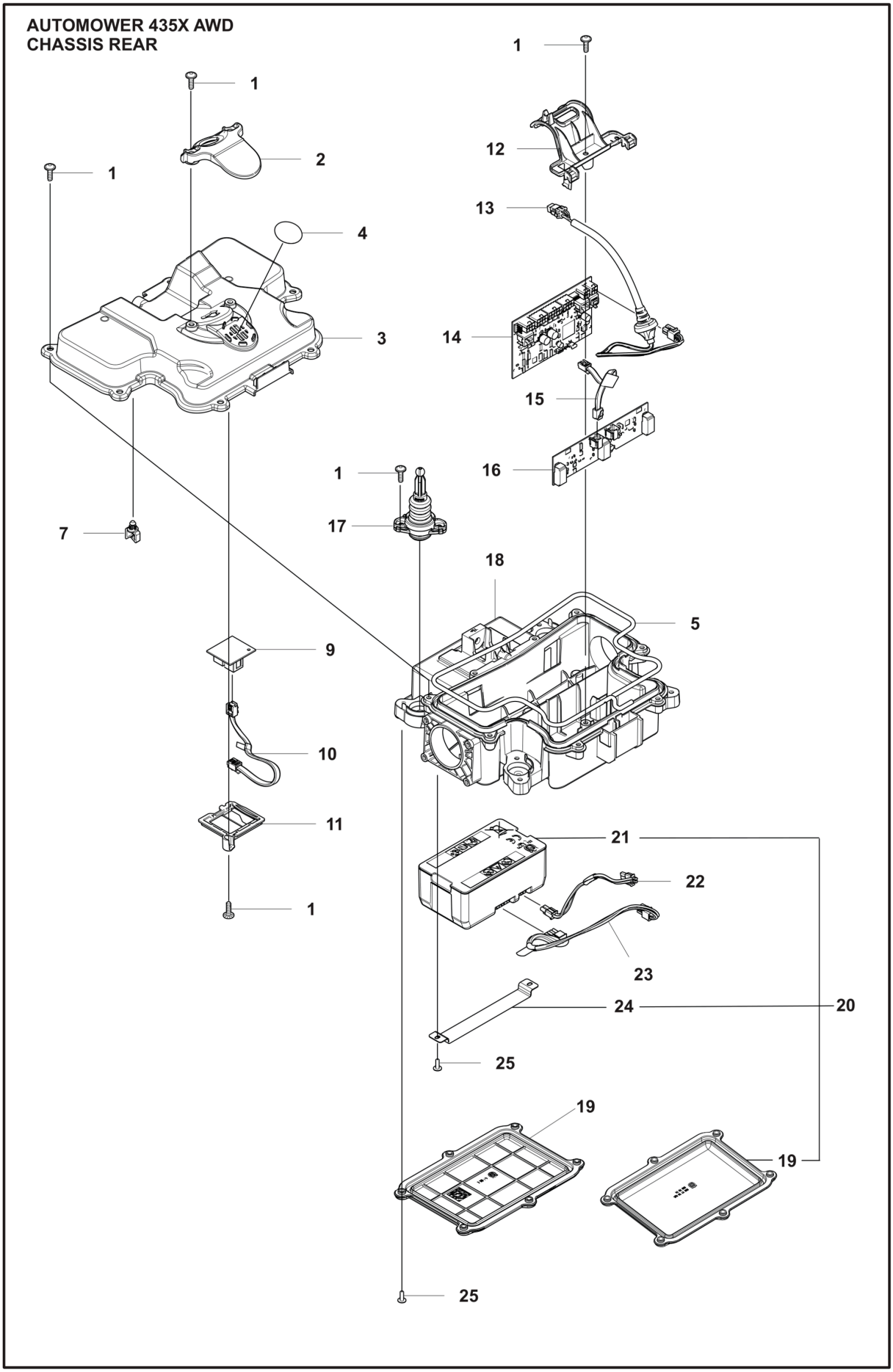
AUTOMOWER 435X AWD
CHASSIS REAR
1
2
1
4
3
7
1
17
18
9
10
11
1
1
12
13
14
15
16
5
21
22
23
24
20
25
19
19
25

Reference	Artikelnummer	Varenavn	Antal	Kommentar
1	575543314	SCREW	17	ITXPANT
2	591487001	HOLDER	1	Grommet
3	591484201	CHASSIS	1	Upper Rear
4	577753701	LUFTFILTER	1	Air Filter
5	574874713	TÆTNINGSLISTE	1	Chassis Lower Rear
7	595082901	HOLDER	1	Wire Sadle
9	591125501	KREDSKORT	3	Magnetic Sensor
10	536253901	LEDNING KPL	1	Modular Jack
11	591494301	HOLDER	1	Magnetic Sensor Board
12	591494201	HOLDER	1	PCB Rear
13	593309402	LEDNING KPL	1	Main Cable Rear
14	591125602	KREDSKORT	1	Motor Controller Board
15	536253901	LEDNING KPL	1	Modular Jack
16	546001101	KREDSKORT	1	Loop Receiver Board Rear
17	594058601	JOYSTICK ASSY	4	Rear
18	591484102	CHASSIS	1	Lower Rear

19	536777901	DÆKSEL	1	From S/N 232407231
19	594016201	DÆKSEL	1	Up to S/N 232407230
20	536896001	BATTERY	1	Battery upgrade kit, Up to S/N 232407230
20	536896011	BATTERY	1	Battery upgrade kit, Up to S/N 232407230. For Japan only.
21	534199401	BATTERY	1	Battery, From S/N 232407231
21	534199411	BATTERY	1	Battery, From S/N 232407231. For Japan only.
22	597165602	CHARGING PLATE KIT	1	Kit containing Charging plate wiring + Battery charging adapter.
23	535009701	LEDNING KPL	1	Battery Cable Premium
24	536856101	FÆSTE	1	From S/N 232407231
25	588222201	SCREW ITXPANM	8	

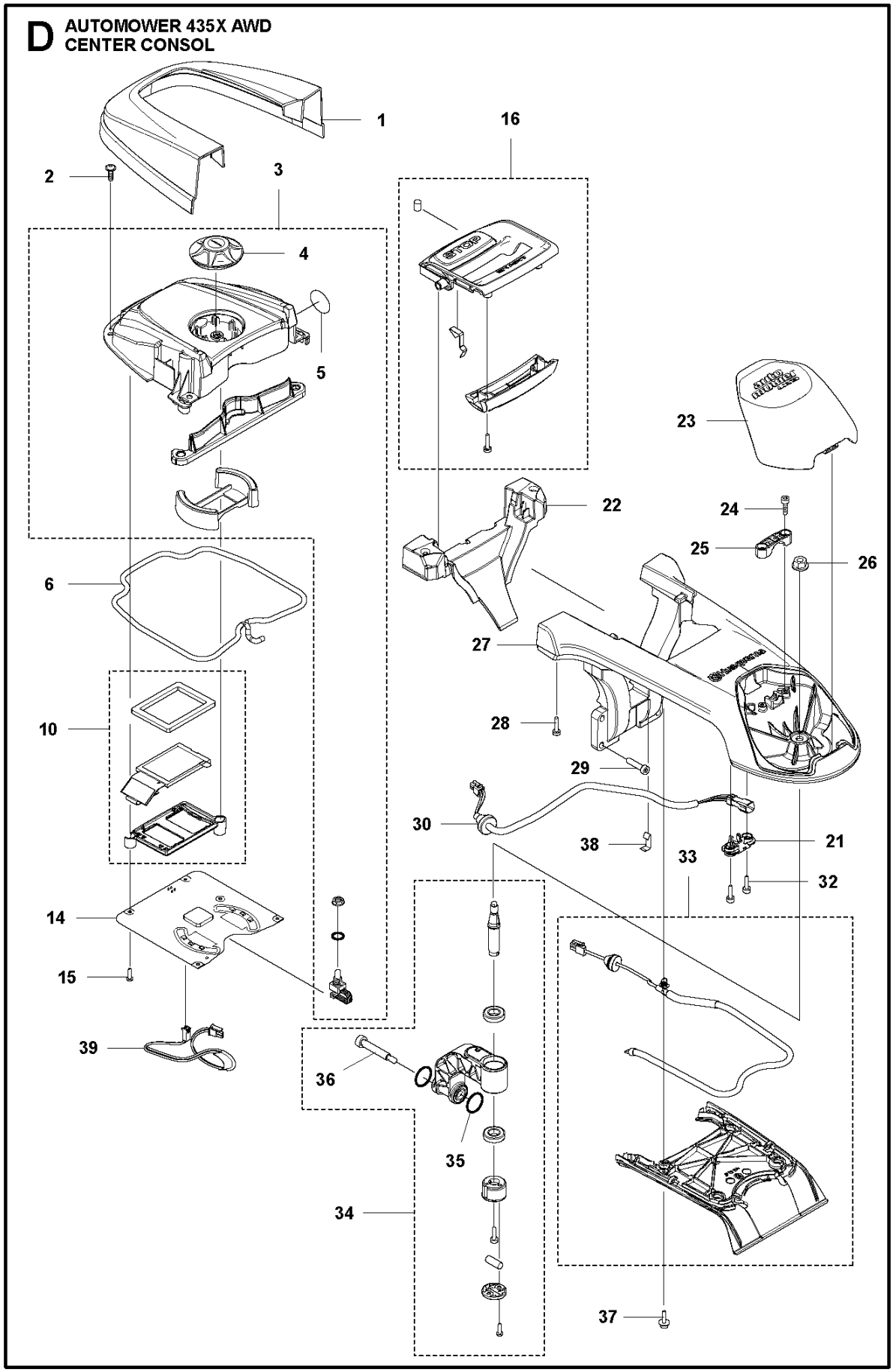
D
AUTOMOWER 435X AWD
CENTER CONSOL
1
2
3
4
5
6
10
14
15
39
16
22
23
24
25
26
27
28
29
30
38
21
33
32
36
35
34
37

Reference	Artikelnummer	Varenavn	Antal	Kommentar
1	592614501	DÆKSEL	1	HMI
2	574450101	SKRUE ITXPANT	10	ITXPANT
3	597162201	COVER ASSY	1	
4	592614201	KNOB ASSY	1	4 Serie
5	577753701	LUFTFILTER	1	Air Filter
6	574874714	TÆTNINGSLISTE	1	Chassis Upper Front
10	597166301	DISPLAY KIT	1	
14	591100201	KREDSKORT	1	Application Board. Up to S/N 234803496
14	591100202	KREDSKORT	1	Application Board. From S/N 234803497
15	525887401	SCREW CITXPANT	6	
16	597162101	HÅNDTAGS KIT	1	
21	593355101	OVERFALD	1	
22	591351701	STØTTEBØJLE	1	
23	591487102	DÆKSEL	1	
24	586444901	SCREW ITXSCT	2	
25	593355202	OVERFALD	1	Main Cable

26	503220401	MØTRIK	1	Washer
27	590944203	STAG	1	
28	580292901	SCREW ITXSCT	5	
29	598570801	SCREW	4	
30	591203201	LEDNING KPL	1	
32	586444901	SCREW ITXSCT	2	
33	592944001	AFBRYDER	1	
34	597166401	PIVOTING ARM KIT	1	
35	740431300	O-RING	2	
36	592629001	SCREW	1	
37	525824401	SKRUE MCT	4	
38	597476101	KLEMME	1	
39	591452202	LEDNING KPL	1	

E AUTOMOWER 435X AWD
WHEELS & TIRES

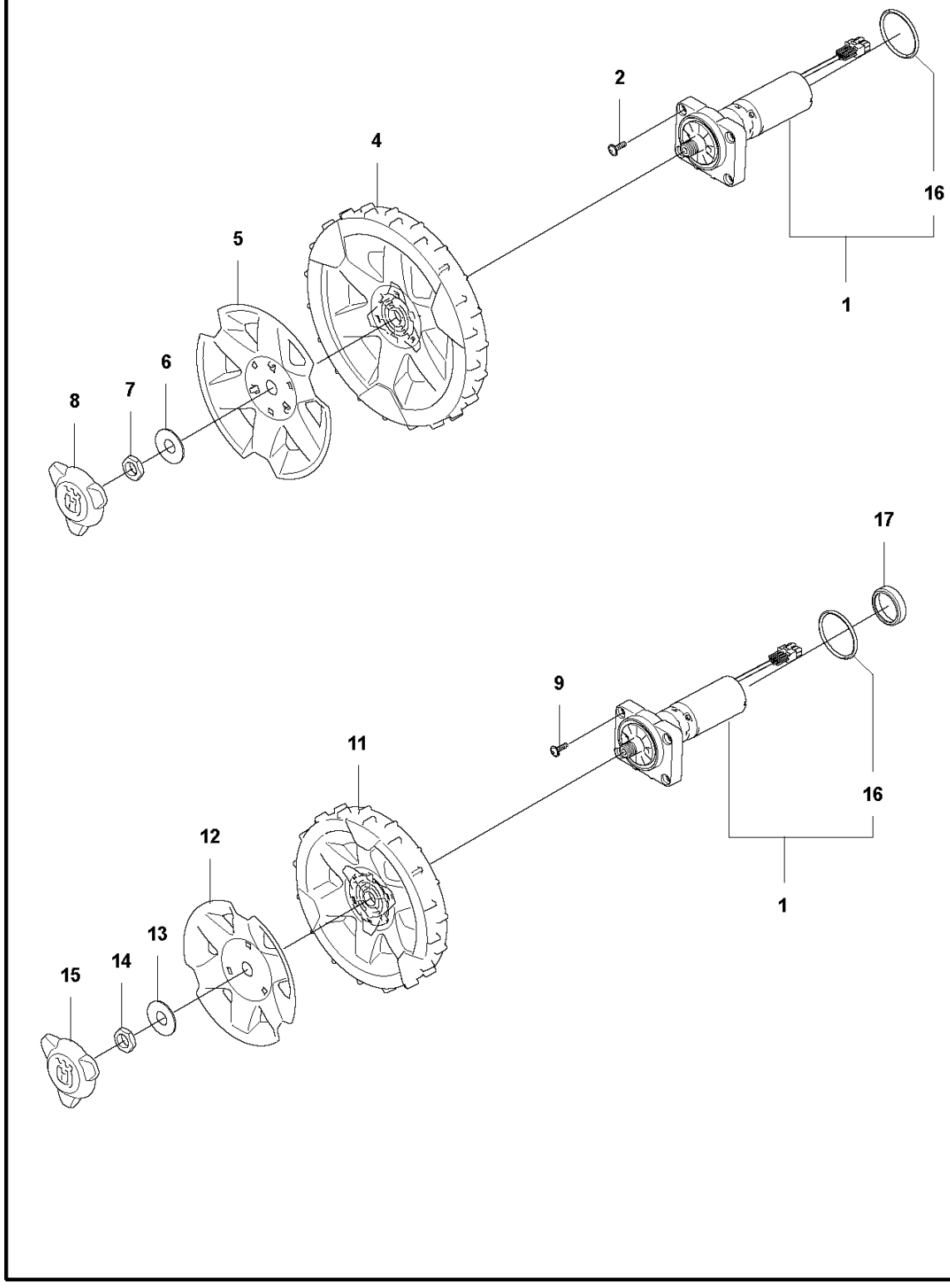

Reference	Artikelnummer	Varenavn	Antal	Kommentar
1	581621307	MOTOR KIT	2	
2	574450101	SKRUE ITXPANT	8	
4	582280203	HJUL KPL	2	Orange
5	579505702	DÆKSEL	2	
6	586210601	SKIVE	4	
7	731432401	HEXAGON TYND	4	
8	579505502	NAVKAPSEL	2	
9	574450101	SKRUE ITXPANT	8	
11	590217303	HJUL KPL	2	Orange
12	590217803	DÆKSEL	2	
13	586210601	SKIVE	4	
14	731432401	HEXAGON TYND	4	
15	579505502	NAVKAPSEL	2	
16	580443902	O-RING	1	
17	529460101	DÆKSEL	1	

AUTOMOWER 435X AWD
BLADE MOTOR AND CUTTING EQUIPMENT

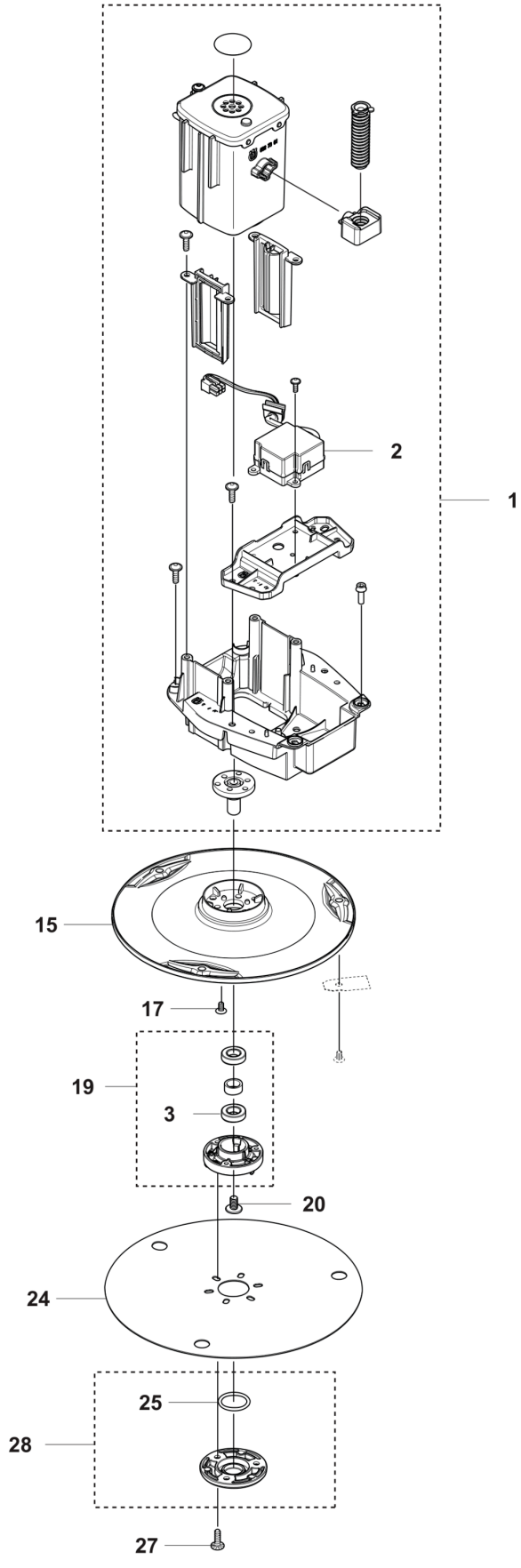

Reference	Artikelnummer	Varenavn	Antal	Kommentar
1	592733701	CUTTING MODULE	1	
2	592735801	HEIGHT ADJUSTMENT MOTOR	1	
3	535075703	KUGLELEJE	2	
3	593080801	KUGLELEJE	2	Tube 50 pcs
15	585296902	SKÆRESKIVE	1	For 2019 models
15	531177401	SKÆRESKIVE	1	For 2020- Models
17	590508701	SCREW	3	
19	588421702	LEJEHUS KPL.	1	
20	535076001	SCREW	1	
24	585297001	FRIKTIONSPLADE	1	For 2019 models
24	598794801	FRIKTIONSPLADE	1	For 2020- Models
25	585297501	O-RING	1	
27	575543314	SCREW	1	
28	587449601	DÆKSELSÆT	1	

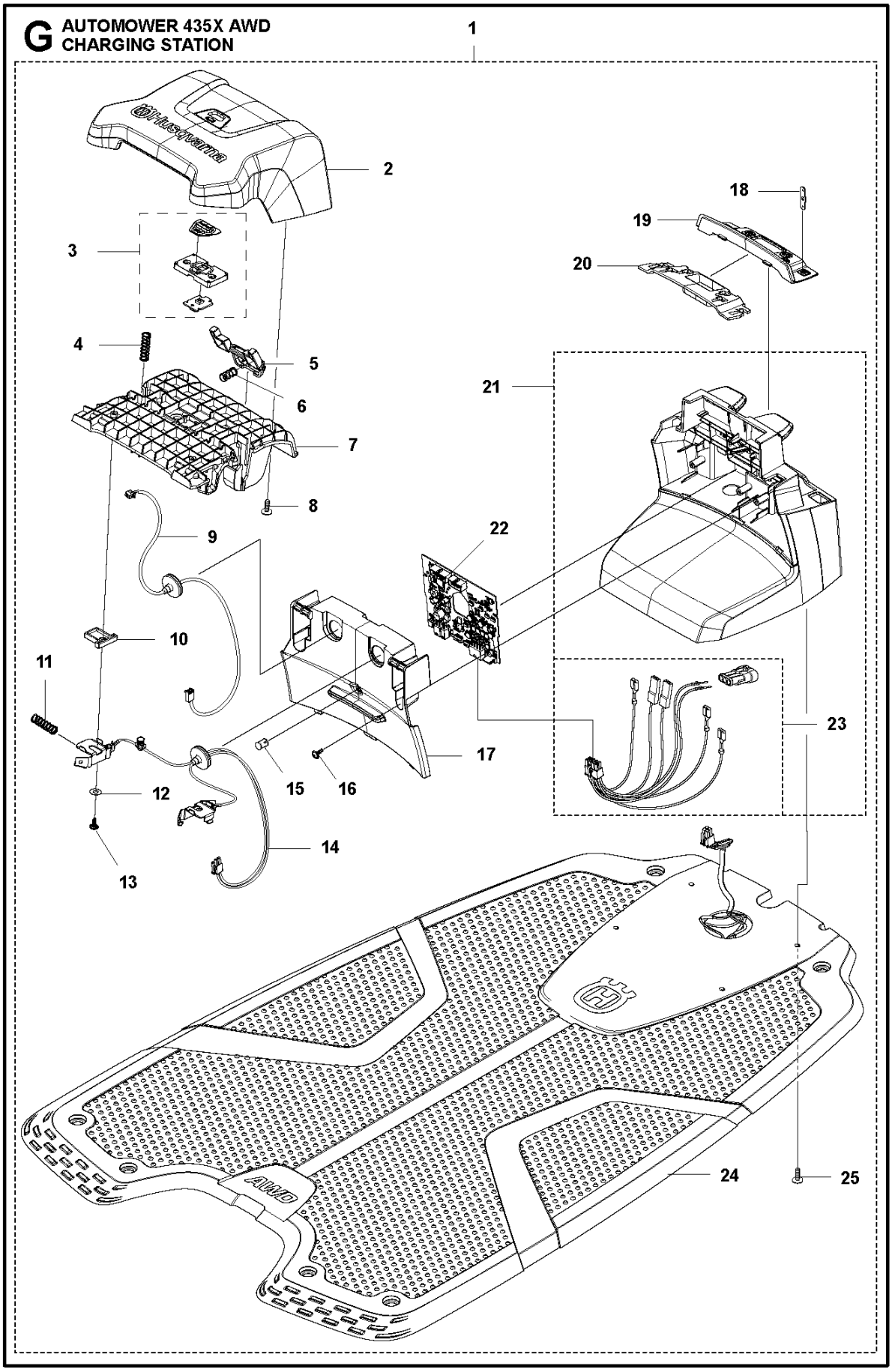
G AUTOMOWER 435X AWD
CHARGING STATION
1
2
3
4
5
6
7
8
9
10
11
12
13
14
15
16
17
18
19
20
21
22
23
24
25
AWD

Reference	Artikelnummer	Varenavn	Antal	Kommentar
1	595310103	LADESTATION	1	Universal P25 3 guides
2	579448203	HAT	1	Without Park button
2	579448204	HAT	1	With Park button
3	501065901	BUTTON KIT	1	Home Button Kit, with park button
4	580511401	FJEDER	2	
5	579462402	KNAP	1	Button-Release
6	574487001	FJEDER	1	
7	579458004	RAMME	1	
8	575543314	SCREW	12	
9	579708301	KABELRØR	1	Home Button Wiring, with park button
10	579460502	AFSTANDSSKIVE	2	
11	580511401	FJEDER	2	
12	734113741	SKIVE	2	
13	575543314	SCREW	12	
14	531242202	LEDNING KPL	1	Loom Charging Contact, From S/N 234902203
14	531242201	LEDNING KPL	1	Loom Charging Contact, Up to S/N 234902202

15	590217201	LYGTEGLAS VENSTRE	1	
16	575543314	SCREW	2	
17	579459703	DÆKSEL	1	2 holes, with park button
17	579459704	DÆKSEL	1	1 hole
18	580504101	POLSKO	5	
19	579459803	PANEL	1	
20	579459901	TOOL HOLDER	1	
21	588188802	HUS KPL	1	
22	592894504	KREDSKORT	1	Charging station board
23	588478903	KABELSÆT	1	Wiring CS
24	595283601	BASE ASSY	1	Charging Plate
25	575543314	SCREW	12	

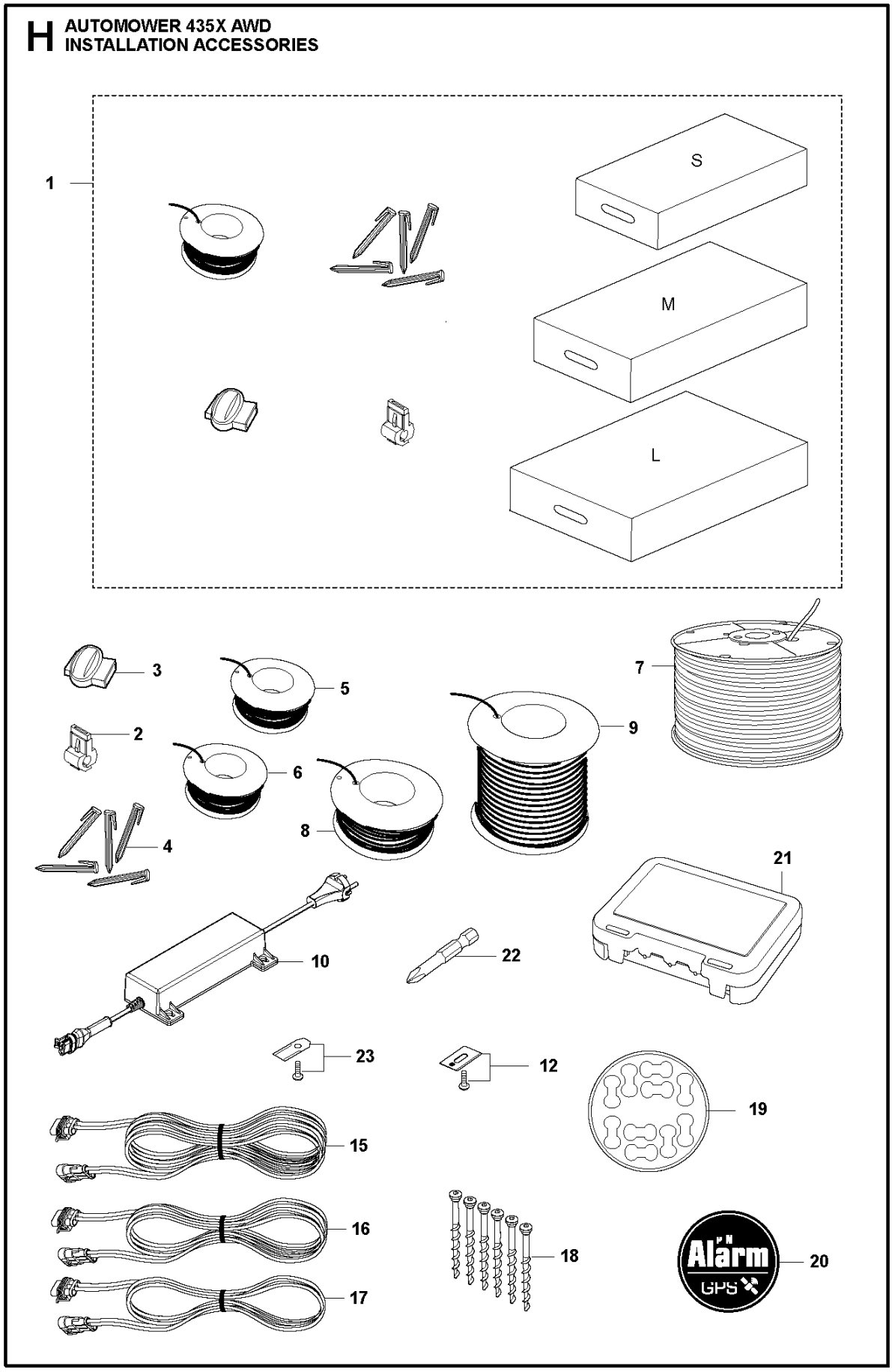
H
AUTOMOWER 435X AWD
INSTALLATION ACCESSORIES
1
S
M
L
3
5
7
2
6
9
8
4
21
10
22
23
12
19
15
16
18
20
17

Reference	Artikelnummer	Varenavn	Antal	Kommentar
1	967623601	INSTALLATION KIT	1	S Wire 150 m, Staples 300 pc, Connectors 3 pcs, Couplers 5 pcs
1	967623602	INSTALLATION KIT	1	M Wire 250 m, Staples 400 pc, Connectors 3 pcs, Couplers 5 pcs
1	967623603	INSTALLATION KIT	1	S Wire 400 m, Staples 600 pc, Connectors 5 pcs, Couplers 5 pcs
2	535129001	KONTAKT	1	Loop Wire Connector
2	535129002	KONTAKT	1	Loop Wire Connector, Blister Pack 100 pcs
2	577864801	KONTAKT	1	Loop Wire Connector, Blister Pack 5 pcs
3	501980201	KOPPLING	1	Coupler
3	501980203	KOPPLING	1	Coupler, 100 pcs
3	577864701	KOPPLING	1	Coupler, Blister Pack 5 pcs
4	577864201	KLAMMER	1	Staple Blister Pack 100 pcs
4	583973401	KLAMMER	1	100 pcs
5	577864301	KABEL	1	Wire, Blister Pack 150 m
5	577864302	KABEL	1	Wire, Blister Pack 50 m
5	580662002	KABEL	1	Wire, 150 m
6	580662001	KABEL	1	Wire, 250 m

7	593297701	KABEL	1	Wire Pro, 300 m
8	522914101	KABEL	1	Wire, 500 m, diam 3,4mm
9	580662004	KABEL	1	Wire, 800 m
10	547307001	POWER SUPPLY UNIT	1	Power Unit EU
10	547307002	POWER SUPPLY UNIT	1	Power Unit GB
10	547307003	POWER SUPPLY UNIT	1	Power Unit CH
10	537639004	DRIVENHED	1	Power Unit US
10	547307005	POWER SUPPLY UNIT	1	Power Unit AUS/NZ
10	547307006	POWER SUPPLY UNIT	1	Power Unit JP
12	595084401	BLADE SET	1	Endurance Blade, 6 pcs
12	595084402	BLADE SET	1	Endurance Blade, 45 pcs
12	595084403	BLADE SET	1	Endurance Blade, 300 pcs
15	588765004	KABLAGE KPL	1	Low Voltage Cable, 20 m
16	588765005	KABLAGE KPL	1	Low Voltage Cable, 10 m
17	588765006	KABLAGE KPL	1	Low Voltage Cable, 3 m
18	575238601	SCREW KIT	1	6 pcs
18	577864901	SCREW	1	Blister Pack, 3 pcs
19	586277901	MÆRKAT	1	Cable Markers, 10 pcs

20	594054801	MÆRKAT	1	Label Alarm
21	590855001	OPBEVARINGSKASSE	1	Cable Connector Protection
22	596339801	VÆRKTØJ	1	Bit for Robotic Blades
23	577606505	BLADE SET	1	Long Life Safety Blade, 45 pcs
23	577606604	BLADE SET	1	Long Life Safety Blade, 300 pcs
23	577864603	BLADE SET	1	Long Life Safety Blade, Blister Pack 9 pcs

AUTOMOWER 435X AWD ACCESSORIES

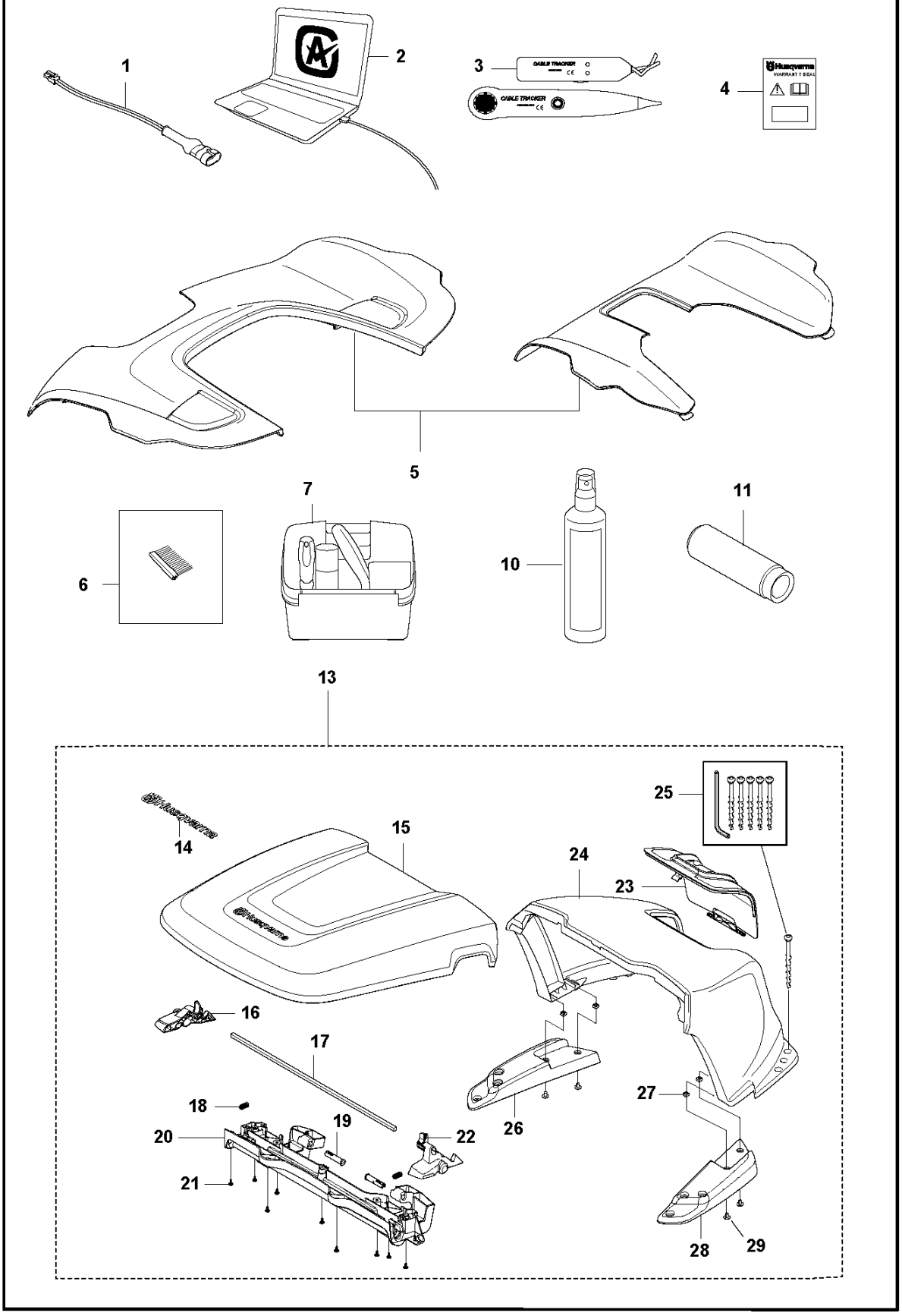

Reference	Artikelnummer	Varenavn	Antal	Kommentar
1	598013101	LEDNING KPL	1	Battery tester cable
3	577606801	TESTUDSTYR	1	Interruption Detector
4	580689502	MÆRKAT	1	Warranty seal
5	596300003	BODY KIT	1	Top Cover Orange
5	596300002	BODY KIT	1	Top Cover White
5	596300001	BODY KIT	1	Top Cover Grey
6	505132803	BØRSTESÆT	1	6 pcs
7	590855101	MAINTENANCE KIT	1	Maintenance and Cleaning Kit
10	593967901	SPRAY	1	Care and Shine 200 ml
11	502519401	DORN	1	Tool for spliting chassi
13	597635301	HUS	1	House KIT
14	577062001	MÆRKAT	1	DECAL
15	598465501	DÆKSEL	1	COVER
16	585324002	HÅNDTAG	1	Handle Left
17	585324101	LED	1	Steel Rod
18	580511401	FJEDER	2	Spring

19	585341501	AXEL	2	Hinge Pin
20	585341601	BJÆLKE	1	Beam
21	575543314	SCREW	9	Screw
22	585324001	HÅNDTAG	1	Handle Right
23	585323602	LEM	1	Hatch
24	597635801	HUS	1	Cover Base
25	597435801	SCREW	1	Screw Kit
26	585323802	STØTTE	1	Support Base Left
27	503226601	MØTRIK 4-KANTET	4	Square Nut
28	585323801	STØTTE	1	Support Base Left
29	535129303	SKRUE IHPANM	4	Screw