2026-11-06

Husqvarna LC 247i



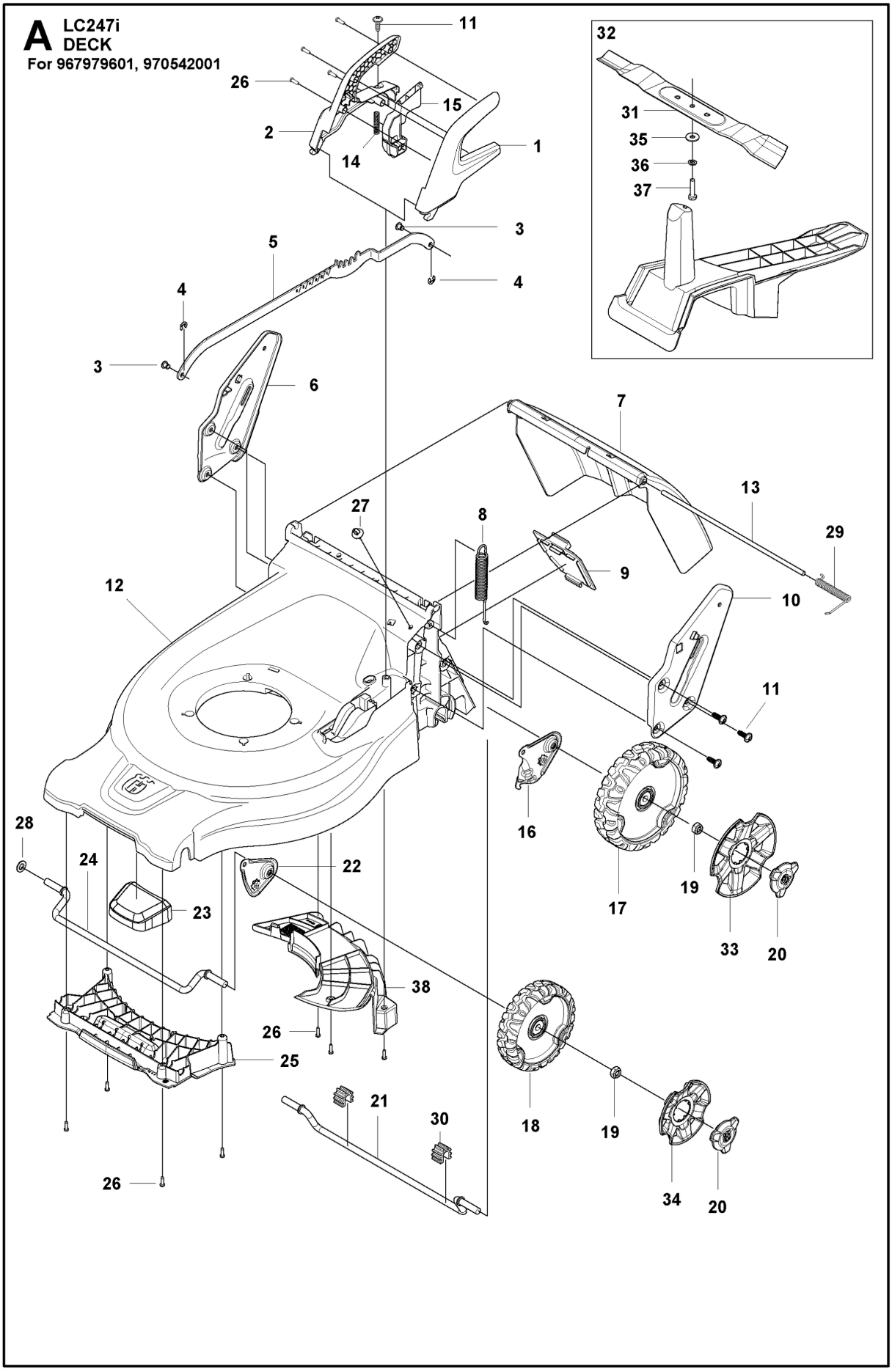
A
LC247i
DECK
For 967979601, 970542001
11
26
15
2
14
1
3
5
4
4
3
6
7
13
27
8
29
9
12
10
11
16
17
19
33
20
28
24
22
23
38
26
25
21
30
18
19
34
20
26
32
31
35
36
37

Reference	Artikelnummer	Varenavn	Antal	Kommentar
1	587203701	DÆKSELHALVDEL	1	Husqvarna,Suspension - Left - Height adjustment
2	587203801	DÆKSELHALVDEL	1	Husqvarna,Suspension - Right - Height adjustment
3	587687001	AKSEL	2	Suspension
4	735311220	LÅSRING	2	7x0.9 St PP,SHAFTS
5	587160801	LED	1	Suspension 170/210
6	587212302	STØTTEBØJLE	1	right
7	590594001	LEM	1	HVA,rear discharge
8	587674401	FJEDER	1	47 cm,Balance - Suspension
9	587095402	DÆKSEL	1	Service door
10	587212102	STØTTEBØJLE	1	left
11	578175802	SKRUE ITXPANT	7	8x24, TBO,For Thermoplastics
12	587151005	CHASSIS	1	Husqvarna,47 cm
13	586984601	AKSEL	1	
14	589597601	FJEDER	1	HA Button
15	587697401	KNAP	1	ASSY - Suspension - Height adjustment
16	587674301	STAG	1	Rear idler 210

17	584611603	HJUL KPL	2	Husqvarna, With Sleeve,210, idle, medium
18	587631501	HJUL KPL	2	Husqvarna,170, Idler
19	587990901	MØTRIK	4	Lock, M12x10
20	584159401	MØTRIKBESKYTTER	4	Nut cap
21	587072601	HJULAKSEL	1	Rear 47 cm,Suspension
22	587072401	STAG	2	Front idler 170
24	587072602	HJULAKSEL	1	Front 47 cm,Suspension
25	588202701	FRIKTIONSPLADE	1	Husqvarna,Front
26	502435301	SKRUE ITXPANT	8	T50x16 Zn/Fe (A009)
27	579317401	SPÆNDEBÅND	1	FIR TREE 170x5
28	577092801	SKIVE	1	12/22/2 FZB ISO7089
29	587101501	FJEDER	1	hatch
30	583055001	LGR.DIST	2	Push, 47 cm
31	590701010	KNIV	1	47cm, Incl bolt & washers, Mulch
32	590790901	MULCH KIT	1	Mulch plug and combi blade
33	584159301	NAVKAPSEL	2	Wheel Ø210mm
34	587632701	NAVKAPSEL	2	Wheel Ø170mm
35	734116441	SKIVE	1	Washer

36	579684201	FJEDERSKIVE	1	Spring washer
37	725245571	SKRUE EHHM	1	M8x30 8.8 ZPB
38	590800401	REMDÆKSEL	1	

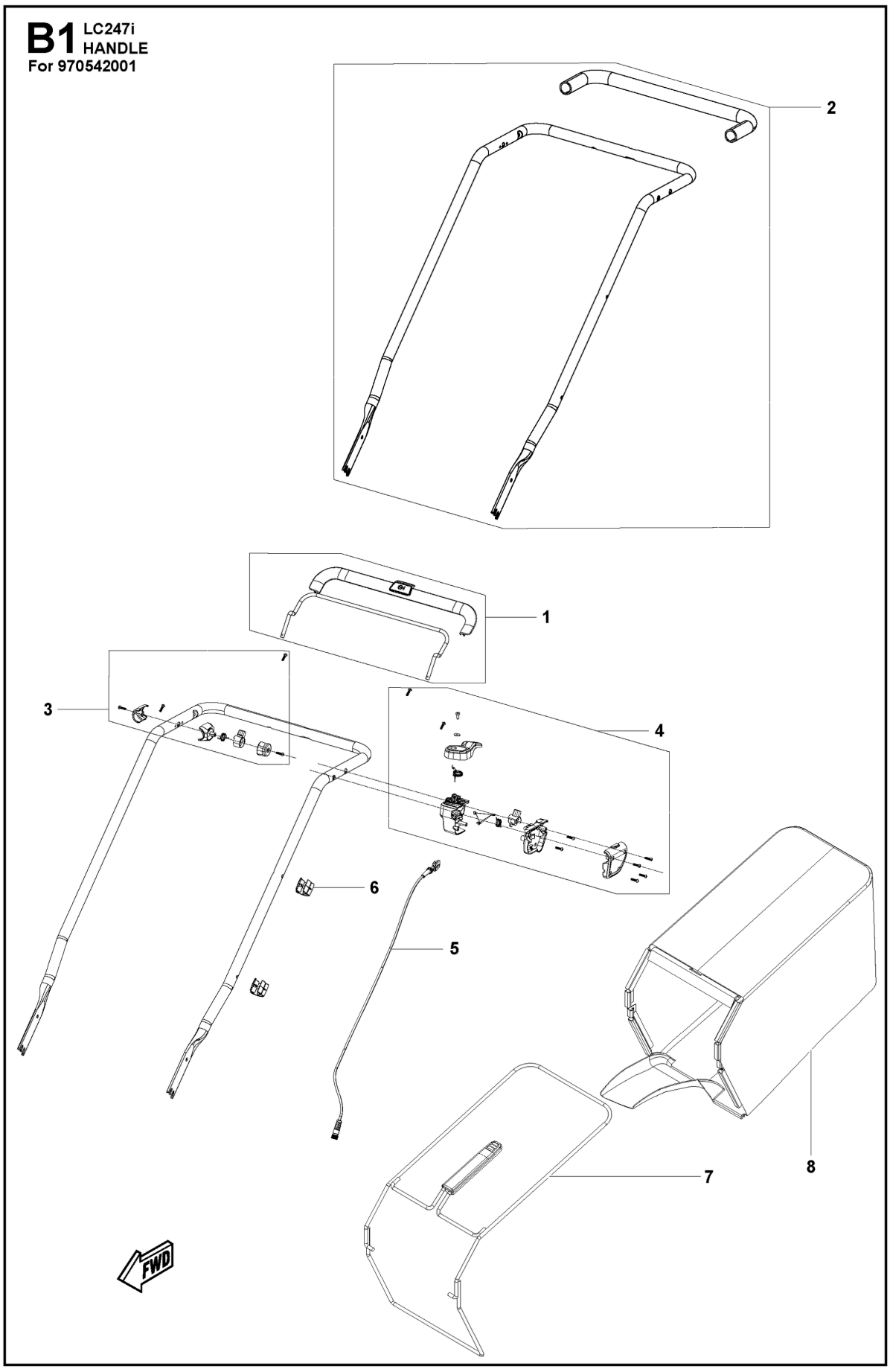
B1 LC247i
HANDLE
For 970542001
2
1
3
4
6
5
7
8
FWD

Reference	Artikelnummer	Varenavn	Antal	Kommentar
1	531147228	REGULERINGSARM KPL.	1	
2	531147229	HÅNDTAGSRØR	1	
3	531147230	SÆDEFÆSTE KPL	1	
4	531147231	SWITCHBOX ASSY	1	
5	531147232	KABEL	1	
6	531147233	KLEMME	1	
7	587182001	RAMME	1	
8	587292301	GRASSBAG	1	

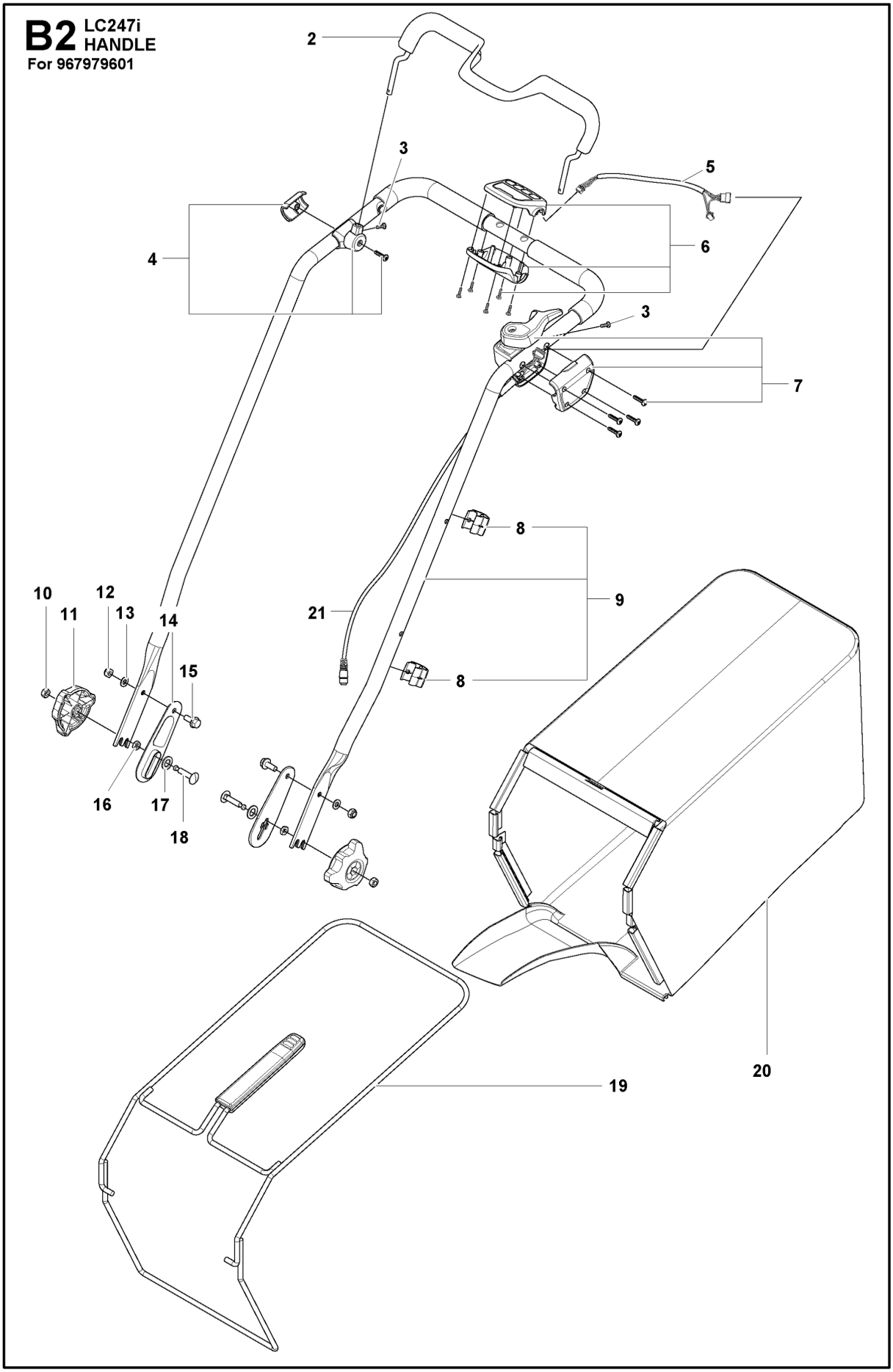
B2 LC247i
HANDLE
For 967979601
2
3
5
4
6
3
7
8
9
21
8
10
12
13
14
11
15
16
17
18
19
20

Reference	Artikelnummer	Varenavn	Antal	Kommentar
2	596253601	REGULERING	1	OPC Bail
3	593198701	SKRUE	2	M4 bail screw
4	593118701	SUPPORT ASSY	1	Bail support assembly
5	593198601	KABEL	1	Control panel assy cable
6	596253003	STYREKORT	1	Push
7	593117901	SWITCHBOX ASSY	1	Push
8	591086401	CABLE HOLDER	2	Handle mounted clip
9	593119702	HÅNDTAG KPL	1	Upper
10	731231801	HEXAGON NUT	2	M8 8 ZPB,ISO 4032
11	587237201	KNOP	2	handle
12	732211801	LOCK NUT	2	M8-8
13	734182051	SKIVE	2	8x16x1.5 St ZPB,Type NB
14	587780401	SKIVE	2	Washer handle/handlesupport
15	506570104	SKRUE EHHFM	2	M8x20 8.8 ZPB,EHHFM
16	731431801	HEXAGON TYND	2	M8 St 04 ZPB,ISO 4035
17	588157401	SKIVE	2	Nylon Washer

18	588157302	BOLT	2	Esloc,Carriage Bolt M8
19	587182001	RAMME	1	Grassbag
20	587292301	GRASSBAG	1	Husqvarna, Fabric assembly
21	597688701	KABEL	1	

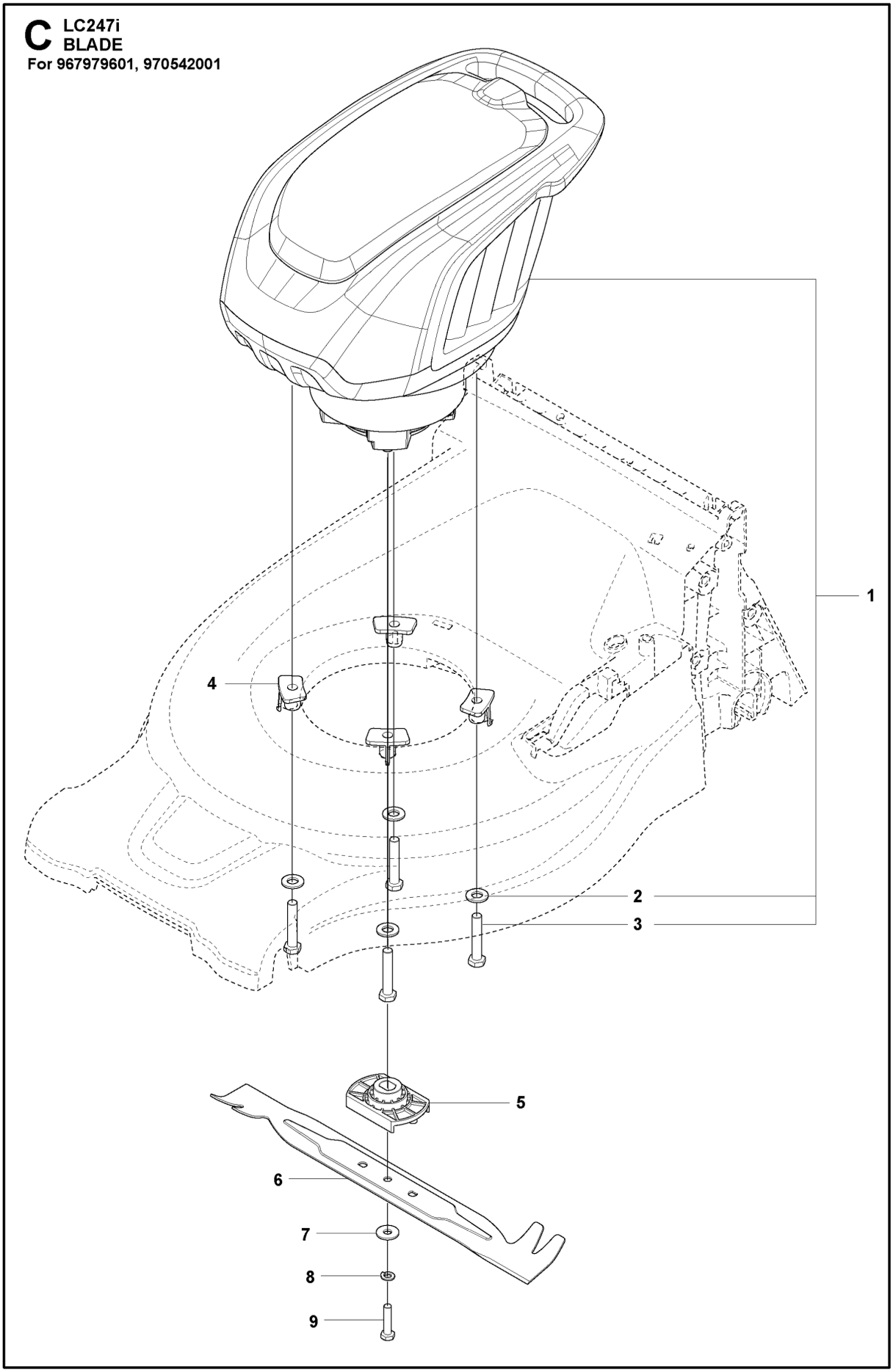
C LC247i
BLADE
For 967979601, 970542001
1
2
3
4
5
6
7
8
9

Reference	Artikelnummer	Varenavn	Antal	Kommentar
1	590531401	DRIVENHED	1	Powerhead
2	504466801	SKIVE	4	10.5x22x2 BRB ZPB
3	725250271	SKRUE EHHM	4	M10x55 8.8 ZPB,ISO 4017
4	578295101	MUFFE	4	For engine screws, Plastic chassis
5	591084301	KLINGETILBEHØR	1	Transmission system
6	590593410	KNIV	1	47cm
7	734116441	SKIVE	1	Washer
8	579684201	FJEDERSKIVE	1	Spring washer
9	725245571	SKRUE EHHM	1	M8x30 8.8 ZPB

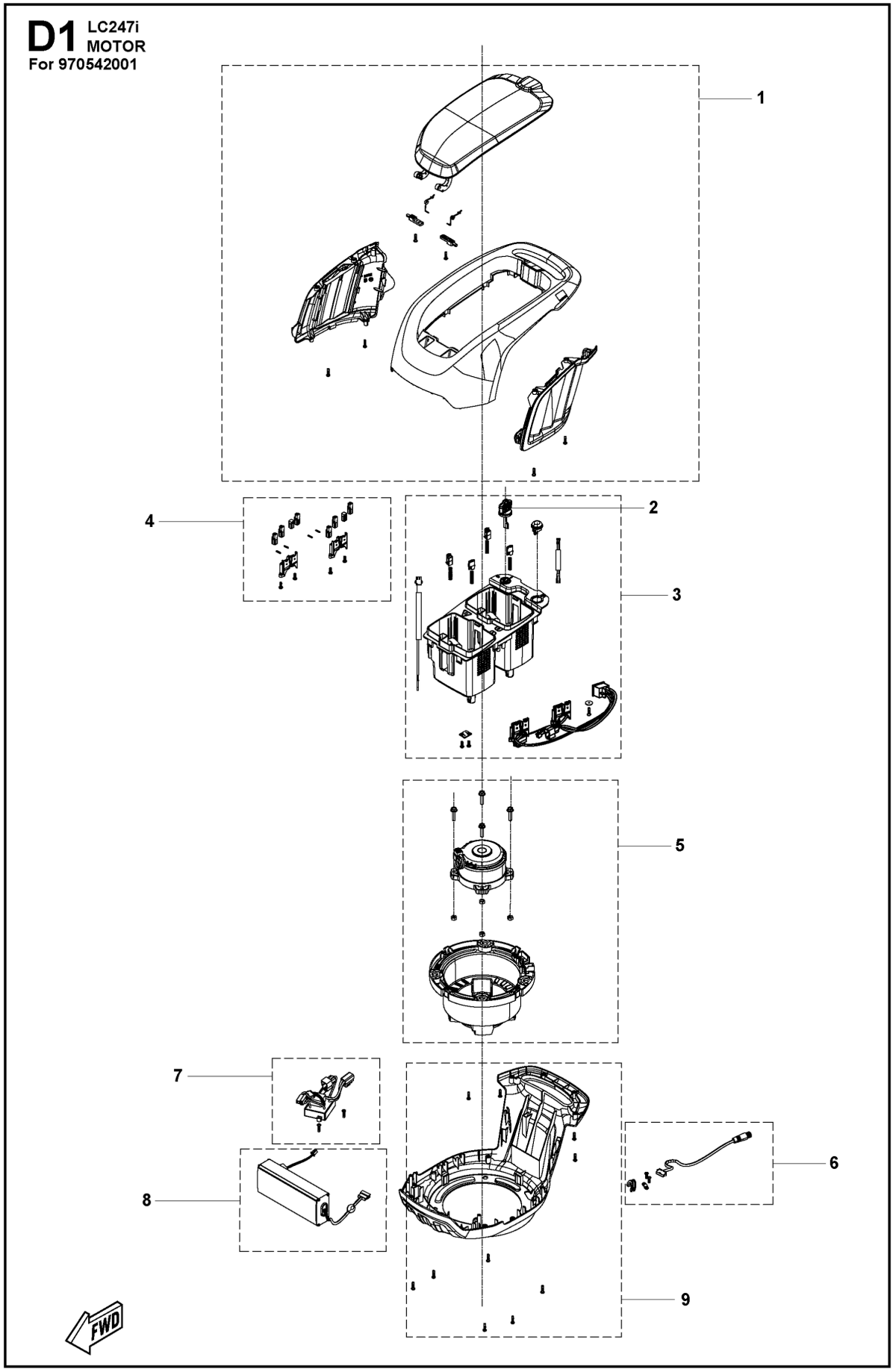
D1 LC247i
MOTOR
For 970542001
1
2
3
4
5
6
7
8
9
FWD

Reference	Artikelnummer	Varenavn	Antal	Kommentar
1	531147220	DÆKSELSÆT	1	
2	501490101	TAST	1	
3	593124503	BATTERISKUFFE	1	Battery pocket. Tyco - 2900200296
4	531147222	KABEL	1	
5	531147223	MOTOR KIT	1	
6	531147224	KABEL	1	
7	531147225	BORD	1	
8	531147227	KNAP	1	
9	531147226	DÆKSELSÆT	1	
10	579686901	TÆNDINGSLÅS	1	

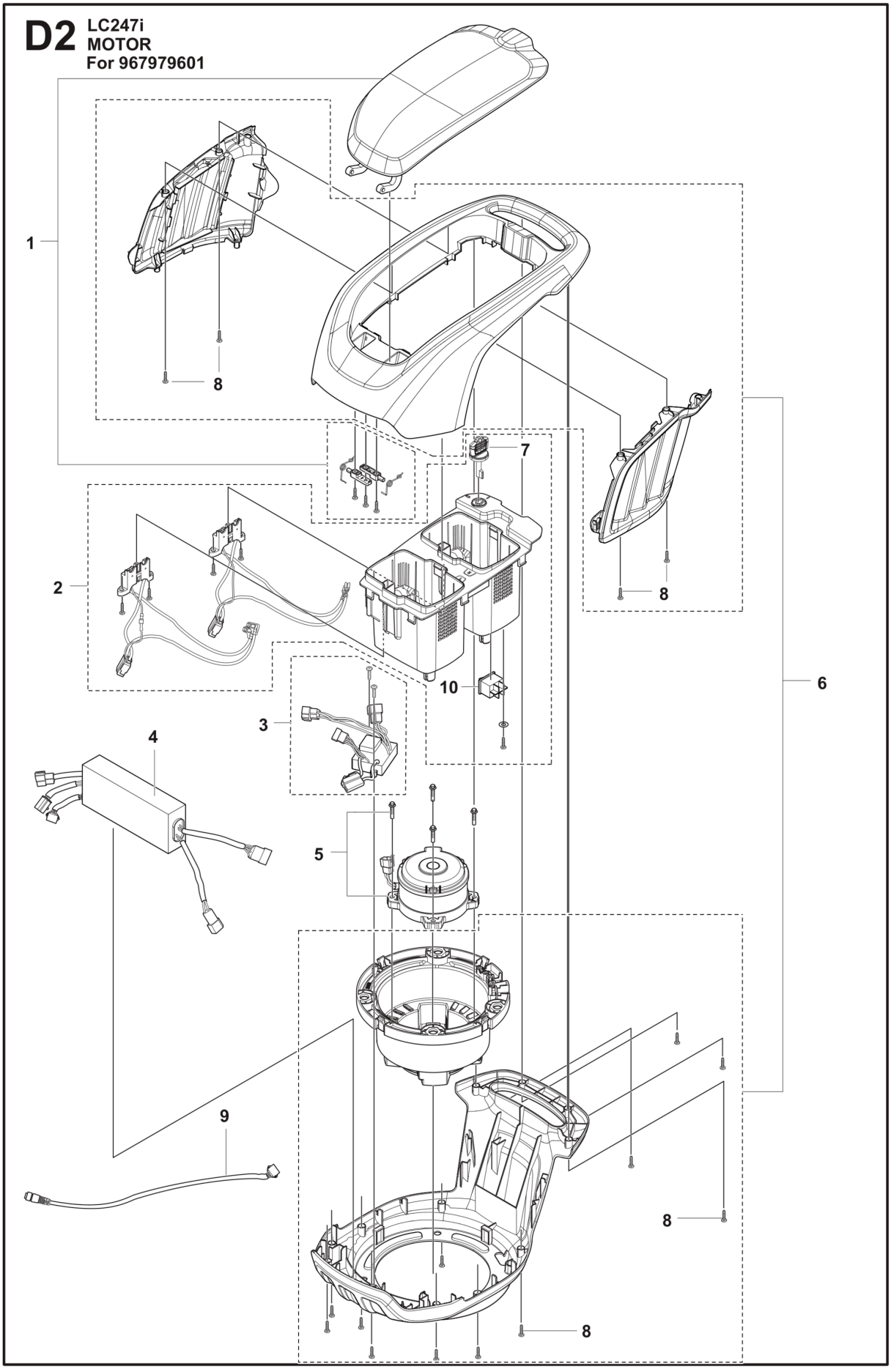
D2
LC247i
MOTOR
For 967979601
1
2
3
4
5
6
7
8
9
10

Reference	Artikelnummer	Varenavn	Antal	Kommentar
1	593124301	LID ASSY	1	Powerhead lid and hinge
2	593124503	BATTERISKUFFE	1	Battery pocket. Tyco - 2900200296
3	593133601	KONTAKTBLIK	1	Battery control plate
4	593132601	MANØVRERINGSKNAP	1	Motor control box
5	592749301	MOTOR	1	Brushless motor 750W
6	593203901	MOTORKAPPE KPL	1	Power unit cover
7	501490101	TAST	1	battery pocket key
8	593755501	SCREW	16	Engine hood screws
9	593722801	KABEL	1	handle
10	579686902	TÆNDINGSLÅS	1	